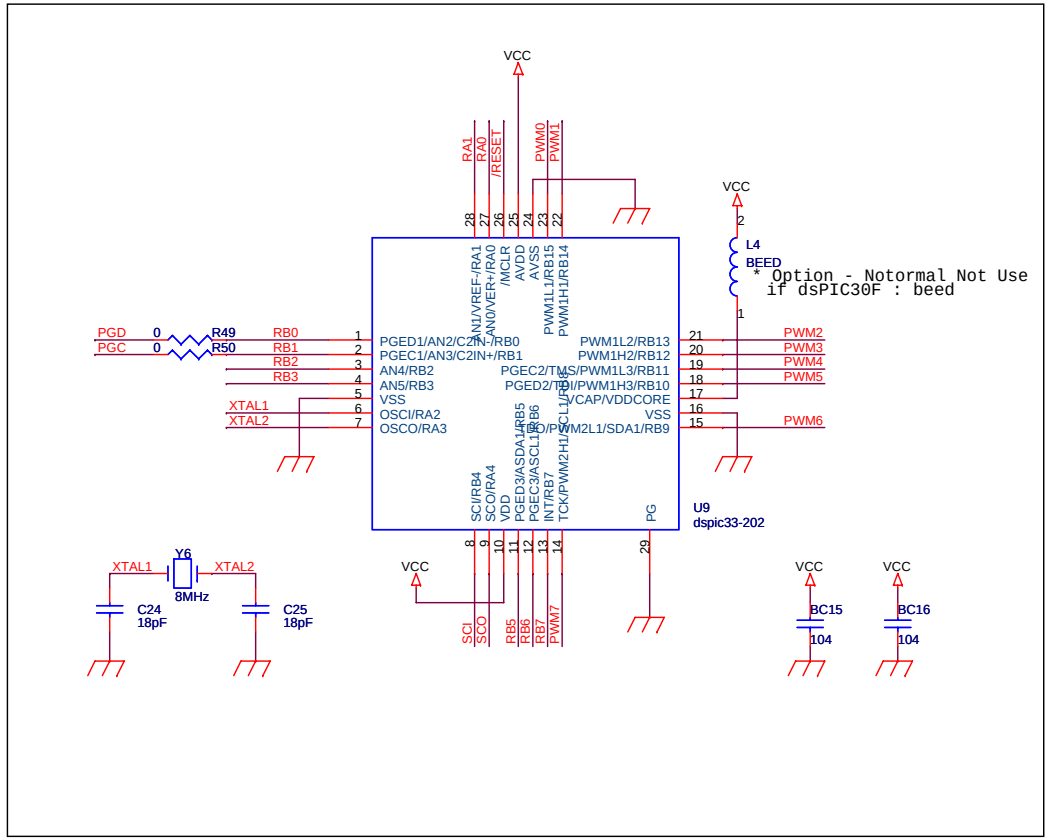

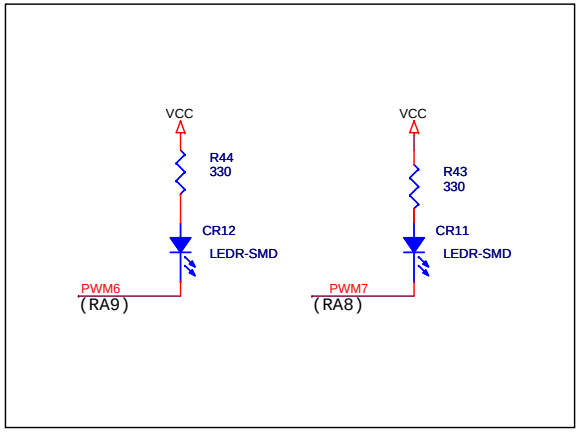

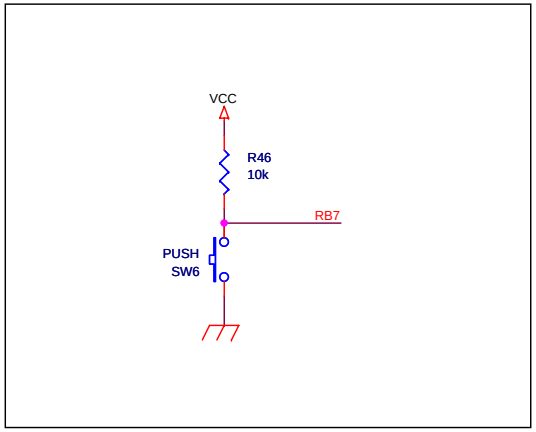

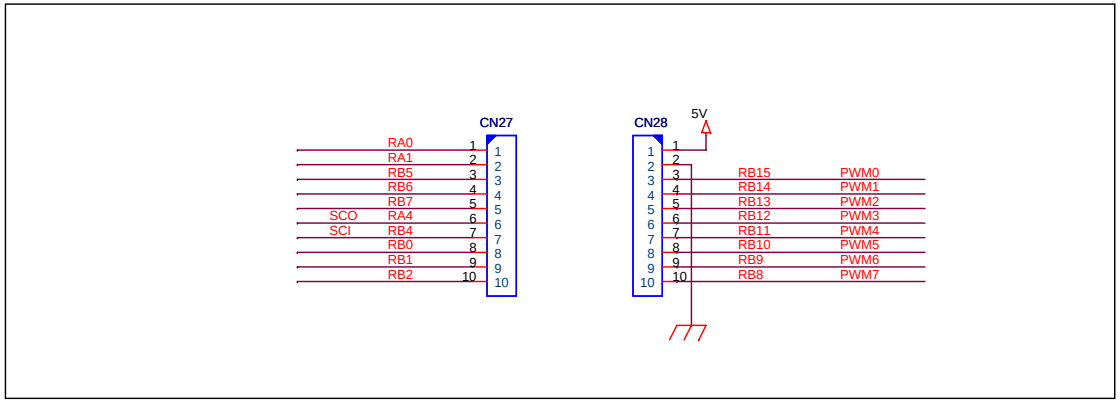

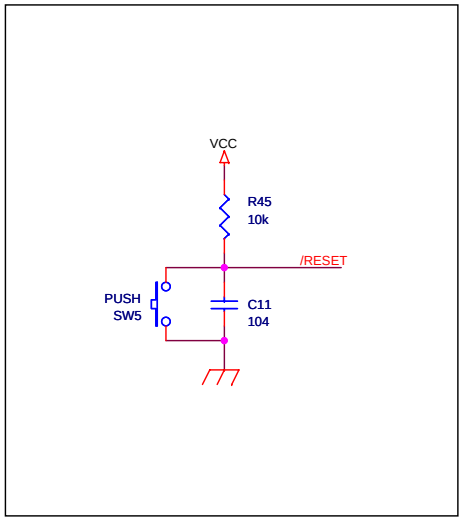

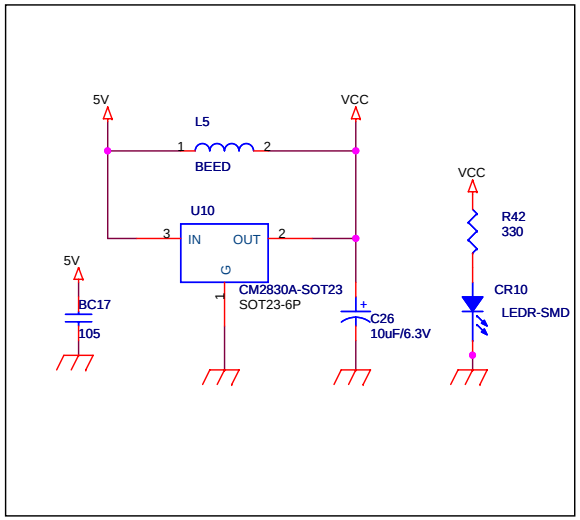

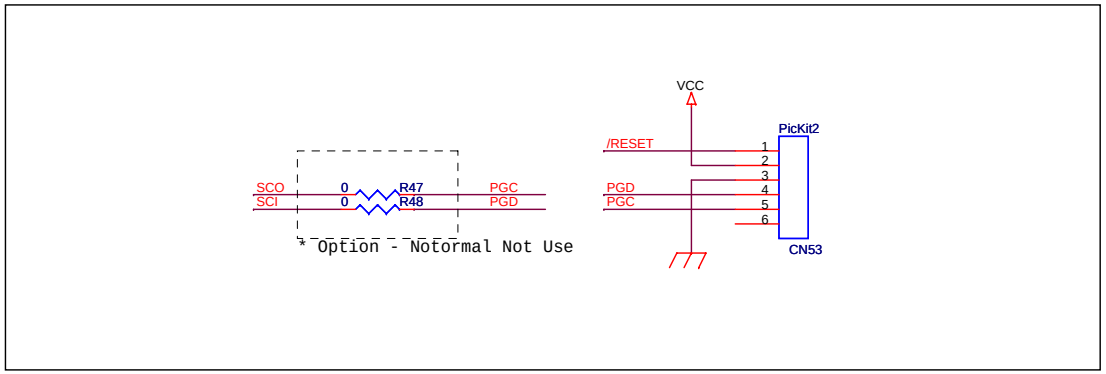

Title	dsPIC3xF-S EVM	
Size B	Document Number http://cafe.naver/elab	Rev 0.1
Date: Tuesday, January 01, 2008	Sheet 1 of 1	